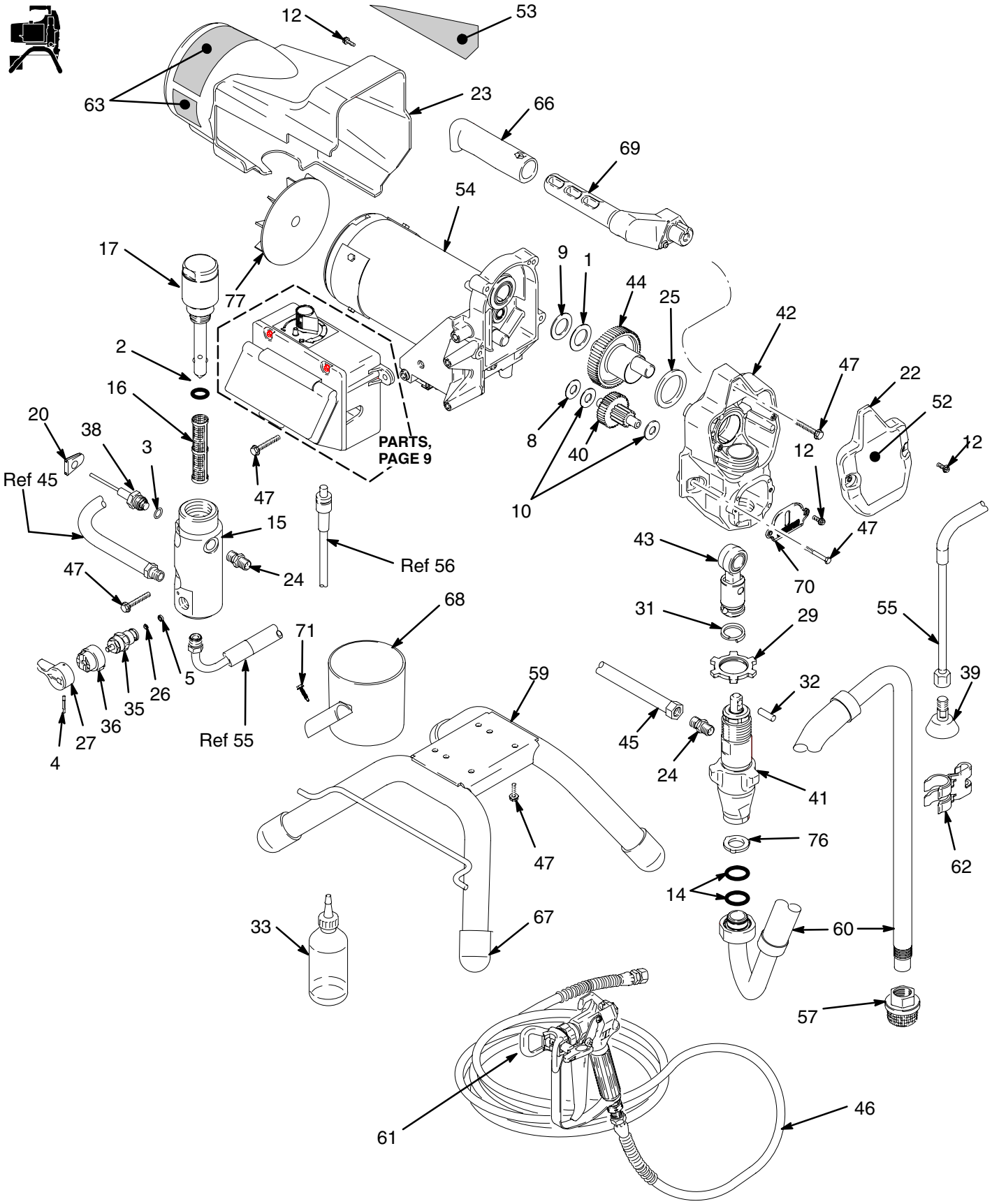
12
53
63
23
66
69
54
17
77
9
1
44
25
42
2
47
22
16
52
20
38
3
8
40
12
12
PARTS,
PAGE 9
Ref 45
47
10
15
47
43
Ref 56
24
70
47
68
31
29
55
71
59
32
39
5
26
35
36
27
4
Ref 55
45
24
41
76
62
47
14
33
67
60
57
61
46

Ref No.	Part No.	Description	Qty
1	107434		1
2	117828		1
3	111457		1
4	111600		1
5	111699		1
8	116073		1
9	116074		1
10	116079		2
12	117501		6
14	117559		2
15	15B067		1
16	246384†		1
17	287167		1
20	15B120		1
22	287058		1
23	287056		1
24	162453		2
25	180131		1
26	187615		1
27	187625		1
29	195150		1
31	196750		1
32	196762		1
33	206994		1
35	235014	35 + 5, 26	1
36	224807		1
38	243222	38 + 3	1
39	241920		1
40	287057	40 + 8, 10	1
41	246428	41 + 32	1
42	287055	42 12, 70	1
43	287053	43 + 31, 32	1
44	287054	44 + 1, 9, 25	1
45	287003		1
46	240794		1
47	117493		11

Ref No.	Part No.	Description	Qty
52	15C325	395	1
	15C326	495	1
53	15C323	395	1
	15C324	495	1
54		230V	
	287060*	395; 54 + 77	1
	287061*	495; 54 + 77	1
		110V	
	287014*	395; 54 + 77	1
	287015*	495; 54 + 77	1
55	246381	55 + 39, 62	1
57	246385		1
59	15E823		1
60	246386	60 + 14, 57, 62	1
61	246539	61 + Manual 309639	1
62	276888		1
63	243301▲		1
66	116139		1
67	15G857		4
68	287903		1
69	287072	69 + 47, 66	
70	15B589		1
71	115723		1
76	115099		1
77	239912		1

233955

78		1 – 77 + Manual 309825	1

▲ *Extra Danger and Warning tags and labels available free.*

* Motor Brush Kit 287735 is available

† Other filters available: 246382, 100 mesh; 246383, 200 mesh; 246425, 30 mesh