287513

Ref No.	Part No.	Description	Qty.
201	183171	PLUG	1
202	193032	NUT, packing	1
203*	193124	V-PACKING, throat, V-Max™ UHMWPE, blue	4
204*	15C989	GLAND, male, throat	1
205	287552	CYLINDER, pump	
206*	101947	BALL, sst, 0.3125 in.	1
207*	106556	PACKING, o-ring	1
208*	193125	V-PACKING, piston V-Max™ UHMWPE, blue	4
210	240150	VALVE, piston	1
212†	244199	KIT, seat, carbide includes 214 and 227	1
213	15E654	VALVE, intake (foot)	1
214*†	102972	BALL, metallic	1
215	193027	GUIDE, ball	1
216*	118504	WIPER, piston	1
217*	183185	GLAND, female, piston	1
218*	15E329	V-PACKING, leather, piston	3
219*	183178	GLAND, male	1
220	248210	SLEEVE, cylinder	1
221*	107098	PACKING, o–ring	2
222	248207	ROD, piston	1
223*	183175	V-PACKING, leather, throat	3
224*	15C990	GLAND, packing	1
227*†	108526	PACKING, o-ring	1
228	193127	SPACER, nut	1
229*	15C998	WASHER, backup	1
230††	15E802	FITTING, pump (not shown)	1
231	118494	O-RING, acetal	1
232††	15E806	TUBE, intake (not shown)	1

* *These parts are also included in Repair Kit 248213, which may be purchased separately.*

† *These parts are also included in Carbide Seat Kit 244199, which may be purchased separately.*
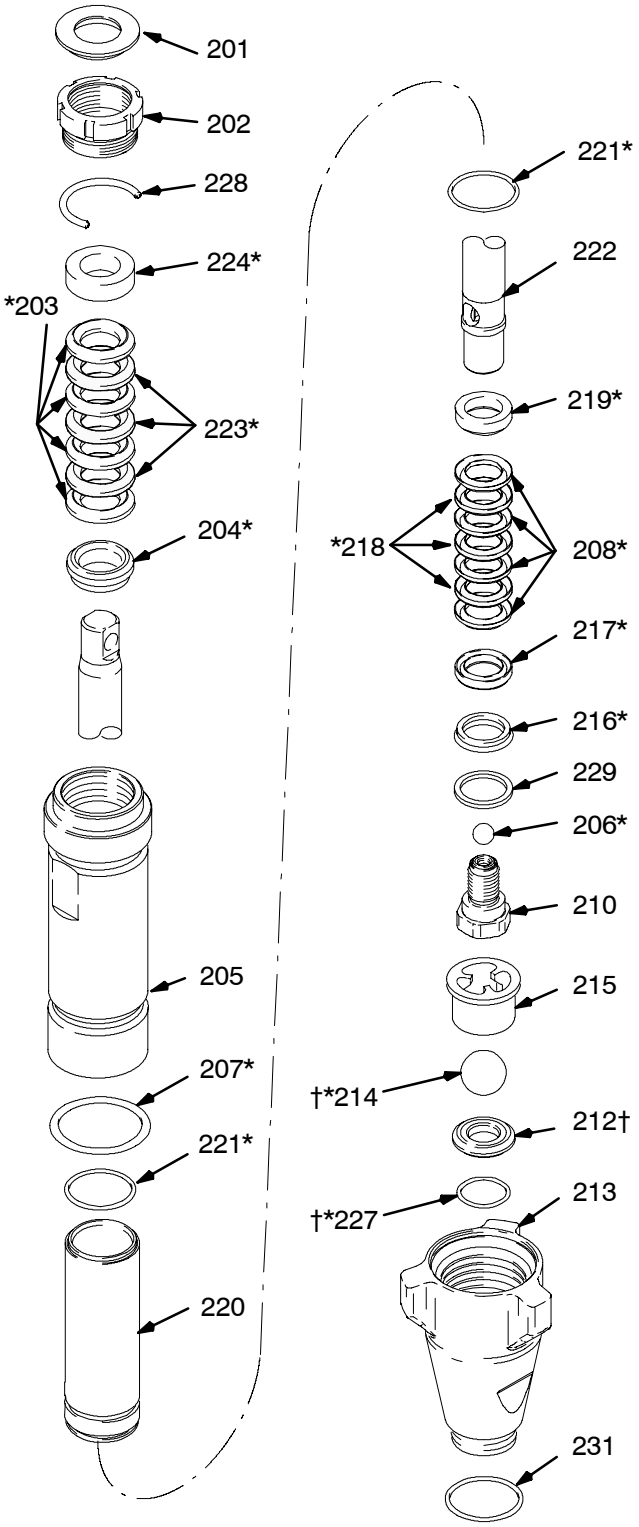
†† *These parts are included with pump 287513.*