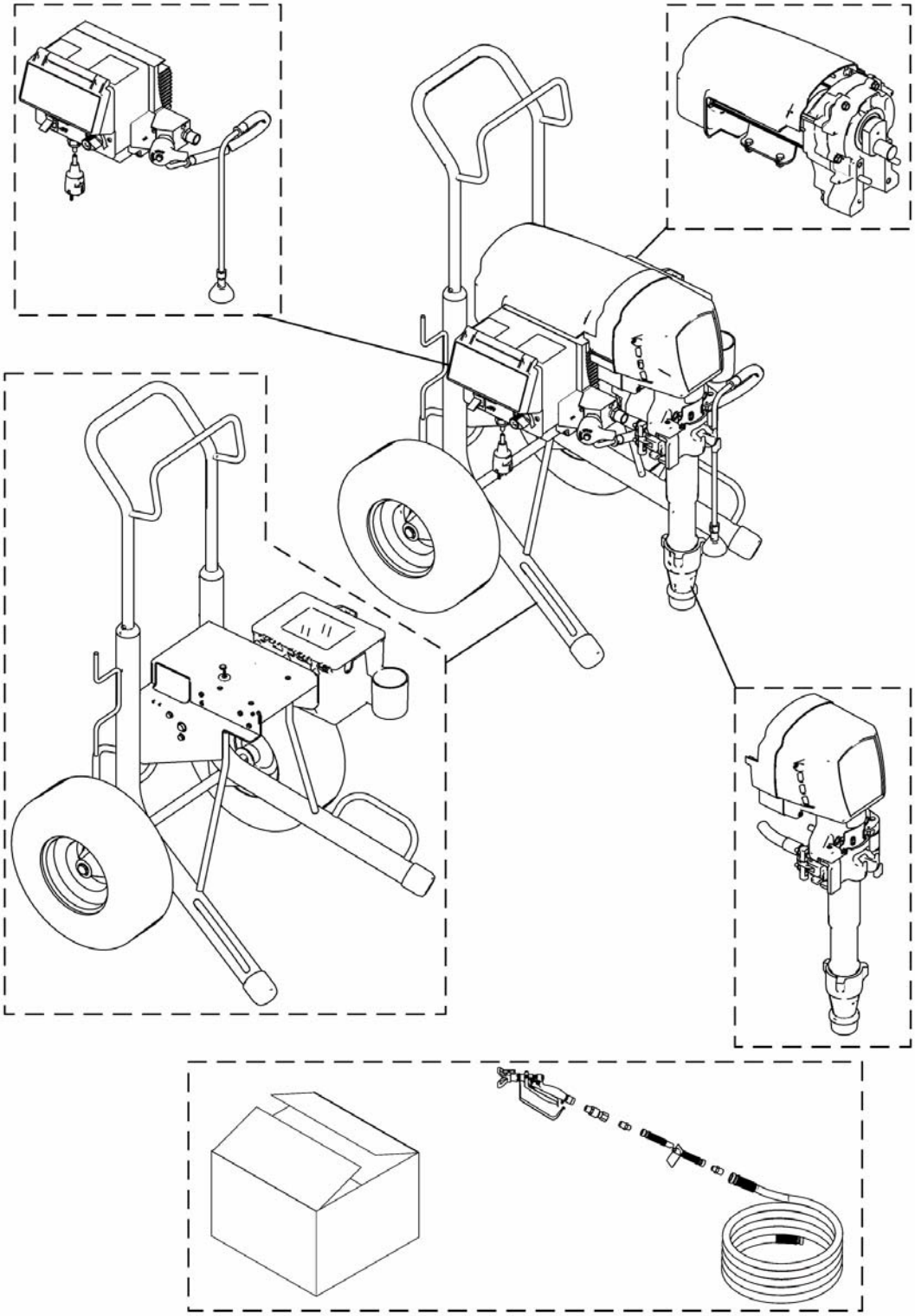

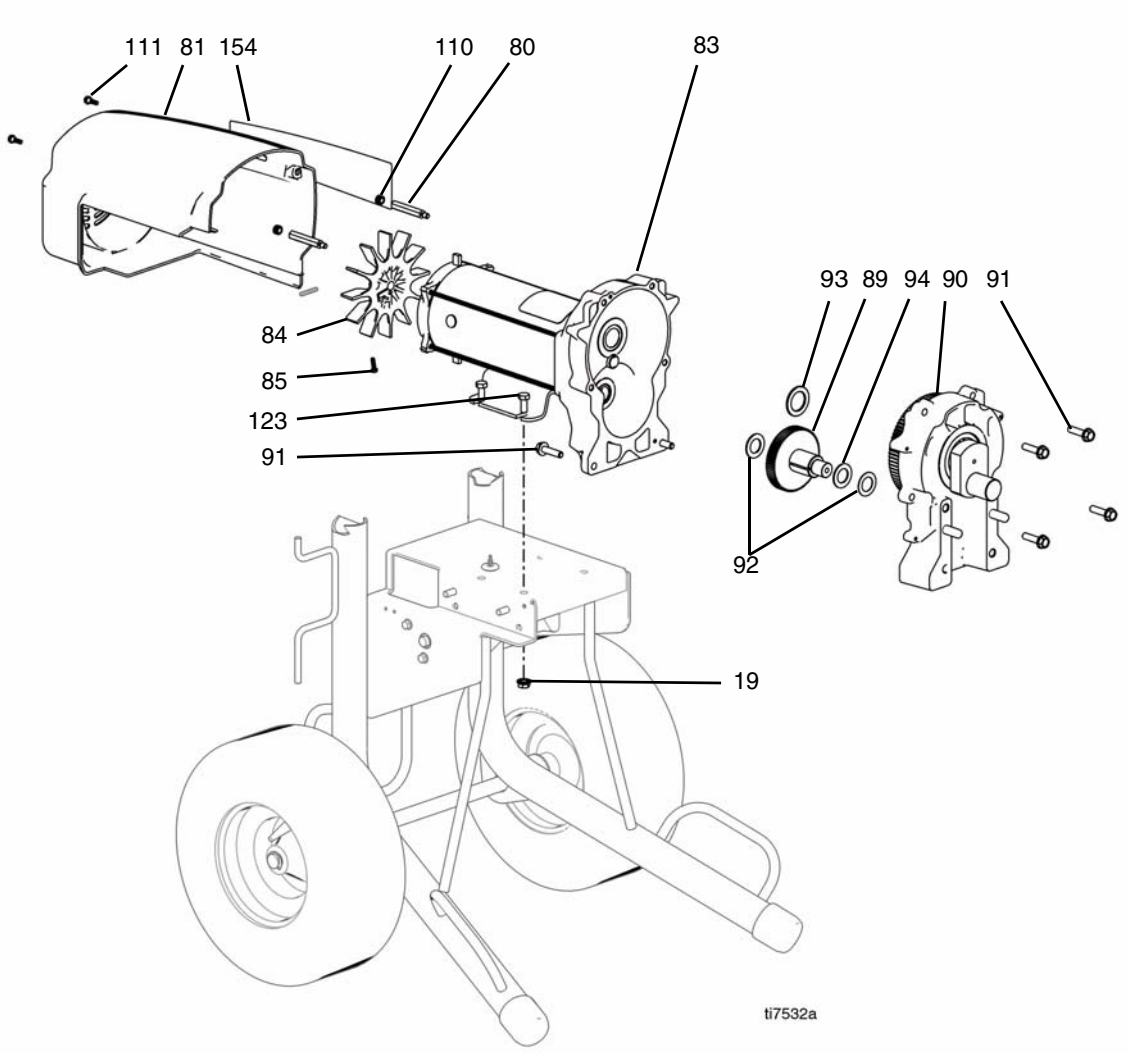

Ref	Part	Description	Qty
19	110996	NUT, hex, flanged	4
80	15G845	SPACER, standoff	2
81	287282	SHIELD, motor, painted, includes 110, 111	1
83	287958	MOTOR, electric, includes 84, 85	1
84	15D088	FAN, motor	1
85	115477	SCREW, mach, torx pan hd	1
89	288035	GEAR, combination, includes 92, 94	1

Ref	Part	Description	Qty
90	287990	HOUSING, drive Mark X, includes 91, 93	1
91	15C753	SCREW, mach, torx, hex wash hd	6
92	114672	WASHER, thrust	2
93	116192	WASHER, thrust	1
94	114699	WASHER, thrust	1
110	276980	grommet, COVER	2
111	119250	SCREW, shlder, hex washer head	2
123	100057	SCREW, cap, hex hd	4
154	15G969	LABEL, Mark X side	1

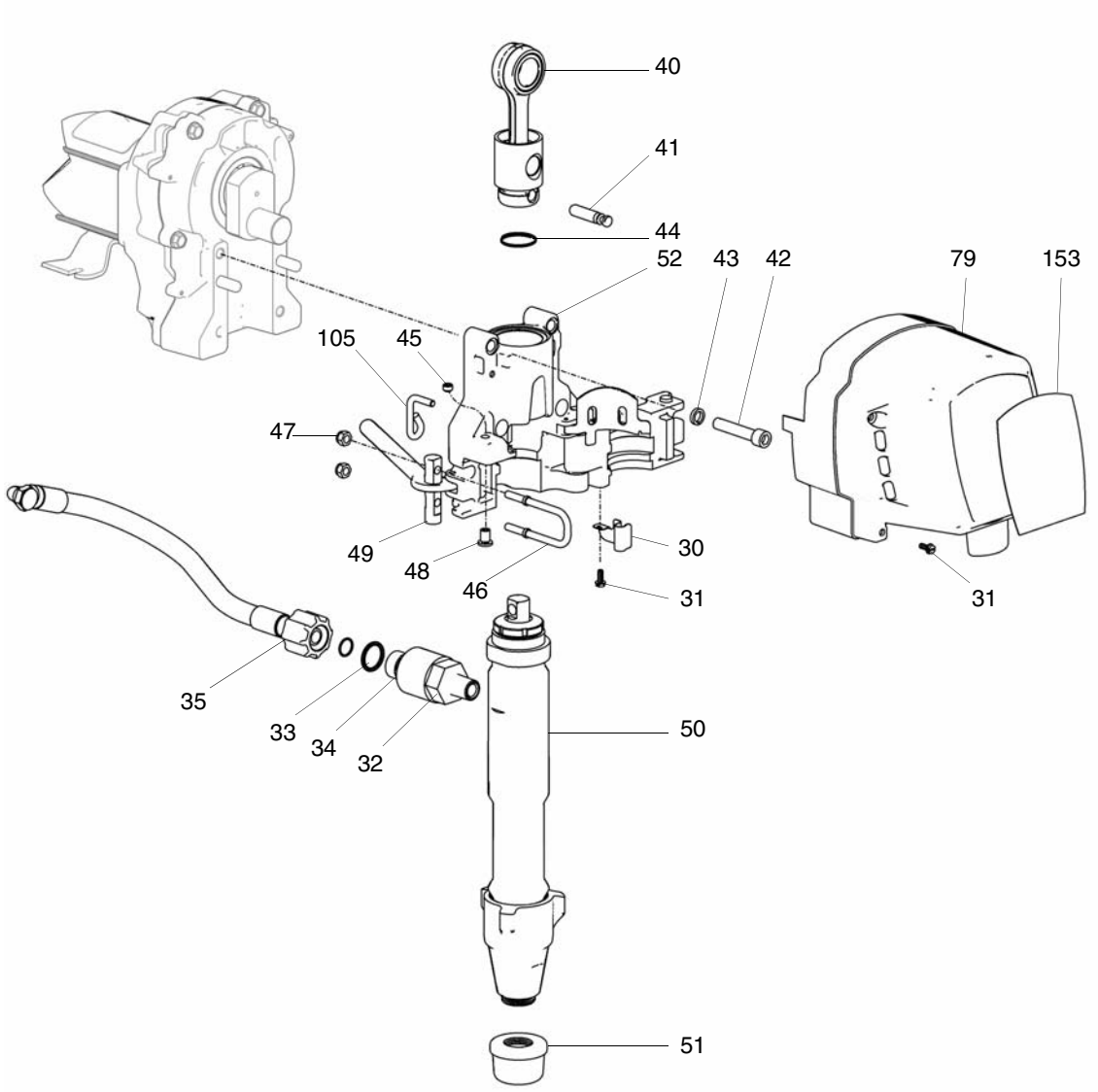

Ref	Part	Description	Qty
30	15E975	CLIP, spring	1
31	118444	SCREW, mach hex washer head	5
32	258654	KIT, replacement, check valve	1
33	109450	O-RING	1
34	C20195	O-RING	1
35	257908	HOSE, coupled, 1/2	1
40	287473	ROD, connecting, includes 41, 44	1
41	15F097	PIN, pump	1
42	112599	SCREW, cap, socket hd	4
43	112600	WASHER, lock, spring	4
44	119677	SPRING, retaining	1
45	15F503	SCREW, set socket head	1
46	15E687	LATCH, bearing housing	1

Ref	Part	Description	Qty
47	111040	NUT, lock, insert, nylock, 5/16	2
48	15F498	SCREW, adjustment	1
49	15E625	PIN, housing, bearing	1
50*	287946	PUMP, displacement	1
51	189920	STRAINER, (1-11 1/2 npsm)	1
52	287991	HOUSING, bearing, includes 30, 31, 45, 46, 47, 48, 49, 105	1
79	287992	COVER, drive, includes 31	1
105	15F116	LATCH, handle	1
153	15G968	LABEL, Mark X front	1

** This item does not include Check Valve (32). Order 258654 for a Check Valve Replacement Kit.*

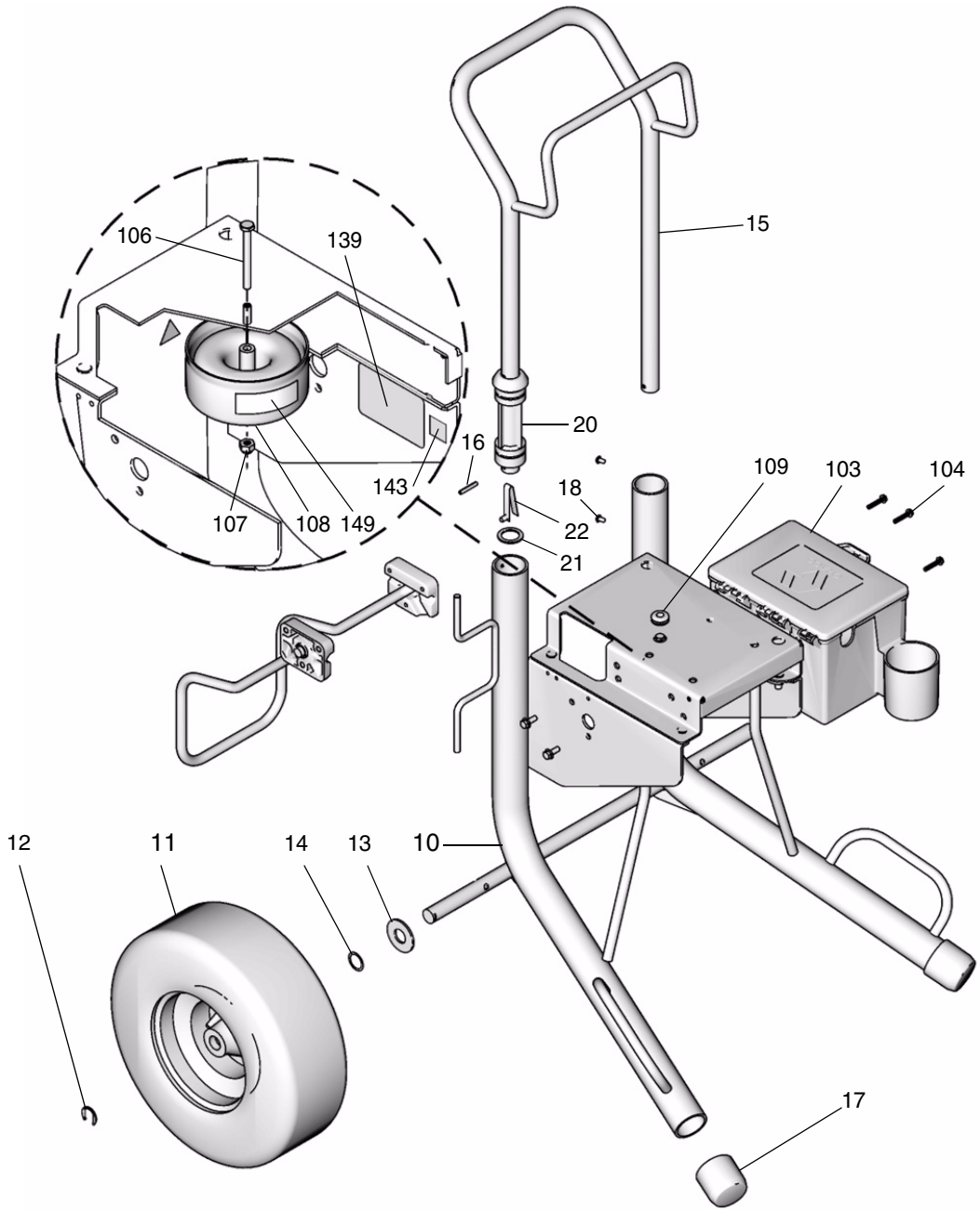

Ref	Part	Description	Qty
10	287778	FRAME, cart, Mark X	1
11	119509	WHEEL, pneumatic	2
12	15E891	CLIP, retaining	2
13	156306	WASHER, flat	2
14	116038	WASHER, wave spring	2
15	245245	HANDLE, cart	1
16	101354	PIN, spring, straight	2
17	276974	CAP, leg	2
18	108795	SCREW, mach, pnh	4
20	191084	SLEEVE, cart	2

Ref	Part	Description	Qty
21	183350	WASHER	2
22	112827	BUTTON, snap	2
103	287253	TOOL BOX, includes 104	1
104	118852	SCREW, machine, hex washer hd	3
106	113469	SCREW, cover	1
107	102040	NUT, lock, hex	1
108	287994	CHOKE, includes 106, 107, 109, 149	1
109	114629	GROMMET, transducer	1
139		LABEL, model and serial number	1
143	15F279	LABEL, WEEE without bar	1
149	290228	LABEL, caution	1

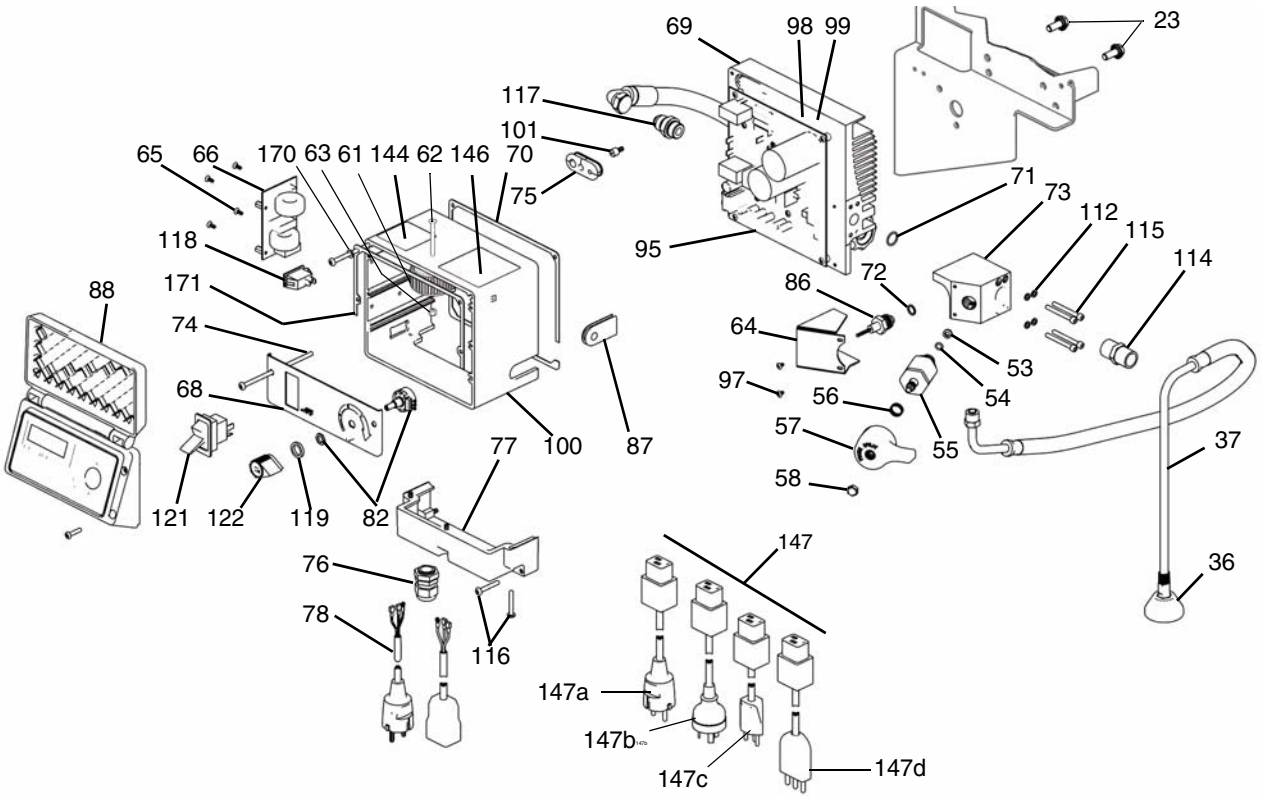

Ref	Part	Description	Qty
23	110963	SCREW, cap, flng hd	2
36	241920	DEFLECTOR, threaded	1
37	287952	HOSE, drain, includes 36	1
53	193710	SEAL, seat, valve	1
54	193709	SEAT, valve	1
55	245103	VALVE, drain; includes 53,54,56,57,58	1
56	114708	SPRING, compression	1
57	15G563	HANDLE, valve	1
58	116424	NUT, cap	1
61	15H063	COIL, filter	1
62	120223	SCREW, machine, flat head 10-24 x 2 in.	1
63	116969	NUT, lock	1
64	15H132	COVER, transducer	1
65	119228	SCREW	4
66	248220	FILTER, board	1
67	198648	LABEL, LCD	1
68	15C947	PANEL, control	1
69	15G486	PLATE, powerbar	1
70	15D036	GASKET, control box	1
71	117517	O-RING	1
72	111457	O-RING	1
73	15G490	BLOCK, valve	1
74	120201	SCREW, mach, pan head	4
75	15G491	GROMMET	1
76	114421	BUSHING, strain relief	1
77	15G492	COVER, board	1
78		CORD, power	
	15G957	W/ IEC CEE 7/7, Model 249627	1
	15G938	W/ IEC 320 C20, Model 249628	1
82	256219	POTENTIOMETER, assembly	1
86	243222	TRANSDUCER, pressure control	1
87	15D033	GROMMET, transducer	1
88	287286	BOARD, display includes 67, 96, 113, 120, 124, 127 (not shown)	1
95	287993	CONTROL, bd, 240V, incl. 97, 102, 128	1

Ref	Part	Description	Qty
96	244032	COVER, control, Ultra	1
97	113045	SCREW, sems, mach, phillips truss	6
98	114391	SCREW, grounding	1
99	186620	LABEL, symbol, ground	1
100	15G487	HOUSING, control	1
101	15D160	STUD, board	4
102	114420	SCREW, mach, pnh, sems, phillips	3
112	100020	WASHER, lock	4
113	196670	LABEL, crtl box cover, Ultra	1
114	158491	FITTING, nipple	1
115	104459	SCREW, shcs 10-32 x 1.75	4
116	111235	SCREW, mach, pnh	5
117	120184	FITTING, hydraulic	1
118	120188	SWITCH, rocker	1
119	15C973	GASKET	1
120	115522	SCREW, mach, pnh	3
121	15D527	SWITCH, power, 240V	1
122	116167	KNOB, potentiometer	1
124	116252	SCREW, #10 taptite phil	4
125	15E250	WIRE, jumper	1
126	15G935	CONNECTOR, electrical	1
127	15E008	PAD, foam	1
128	120463	SCREW, mach, pan hd	2
129	15H679	CONNECTOR, electrical	1
144▲	195793	LABEL, warning	1
146▲	195767	LABEL, danger, ST	1
147	253103	KIT, accessory cordset, adapter, 220V	1
147a	15G958	CORDSET, adapter, Europe	1
147b	15G959	CORDSET, adapter, Italy	1
147c	15G961	CORDSET, adapter, Switzerland	1
147d	15G962	CORDSET, adapter, Australia	1
160	287943	KIT, repair, coil	1
170	116876	WASHER, flat	1
171	15M947	GASKET	1

▲ *Relacement warning and caution labels are available at no cost*

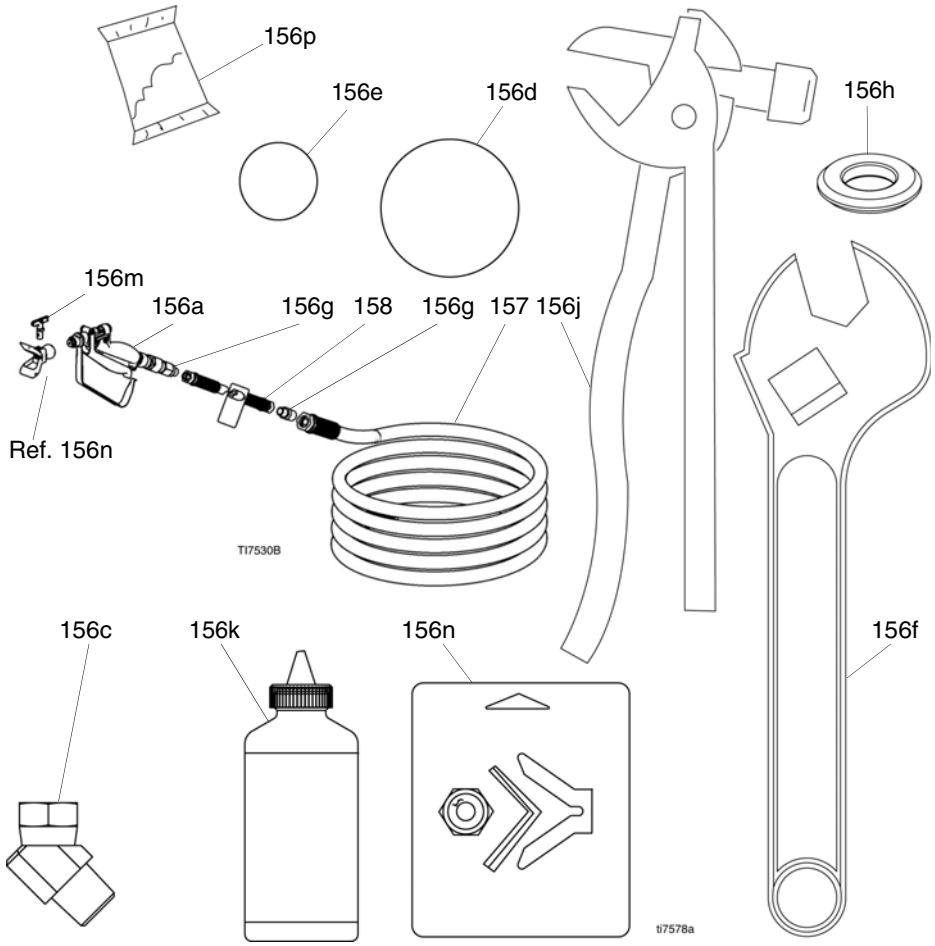

Ref	Part	Description	Qty
156		BOX, parts, Mark X	1
156a	245820	GUN, Mark V SpackMax	1
156c	222297	UNION, adapter, swivel	1
156d	107167	BALL, sst	1
156e	107203	BALL, valve, check	1
156f	111733	TOOL, wrench, adjustable	1
156g	159239	NIPPLE, pipe, rdcg, 1/2 x 3/8 npt	2
156h	193395	SEAT, carbide	1

Ref	Part	Description	Qty
156j	197193	TOOL, hammer	1
156k	206994	FLUID, TSL	1
156m	TMX535	TIP, spray, cylinder (535)	1
	TMX545	TIP, spray, cylinder (545)	1
156n	243161	KIT, repair, tip, spray	1
156p	119400	SEALANT, pipe, sst	1
157	277253	HOSE, cpld, 3625 psi, .50 in. ID, 50 ft	1
158	191239	HOSE, cpld, 3/8 X 11 ft 10 in.	1